WALL-HUNG VANITY

1500mm Right offset basin

NAR-1500-NUV-RB

Cabinet	1495 wide × 455 deep × 520 high
Nuvolite benchtop	1505 × 462 × 20 thick NL-1505462-W
Height with benchtop	540
Storage	Four drawers, two across and two high (228 high fronts)
Waste position	378 from the right end, 369 from the centre
Plumbing	114 wide cut-out in the top drawer, 61 clear behind



TECHNICAL DRAWINGS

All dimensions in millimetres

Drawer down view (top drawer)

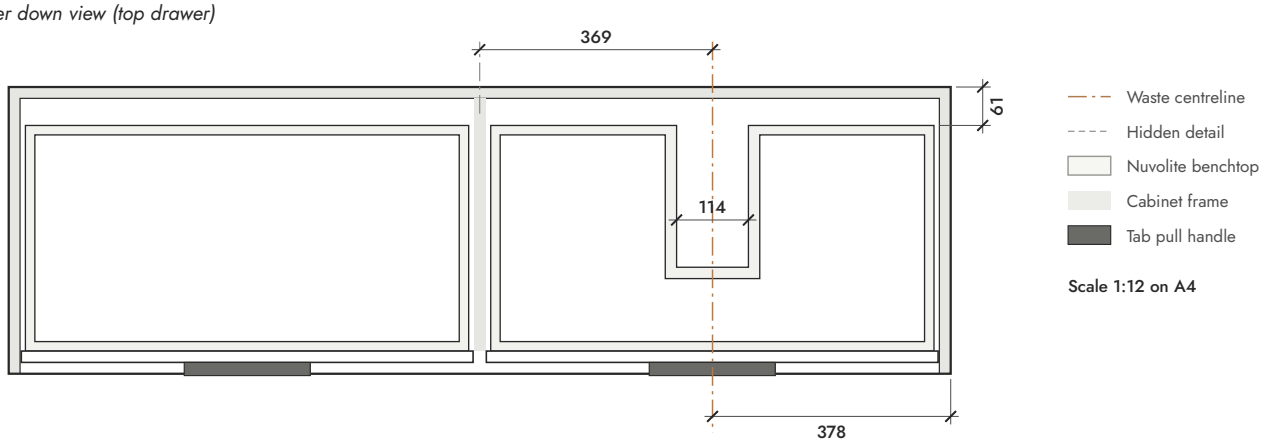

Front view

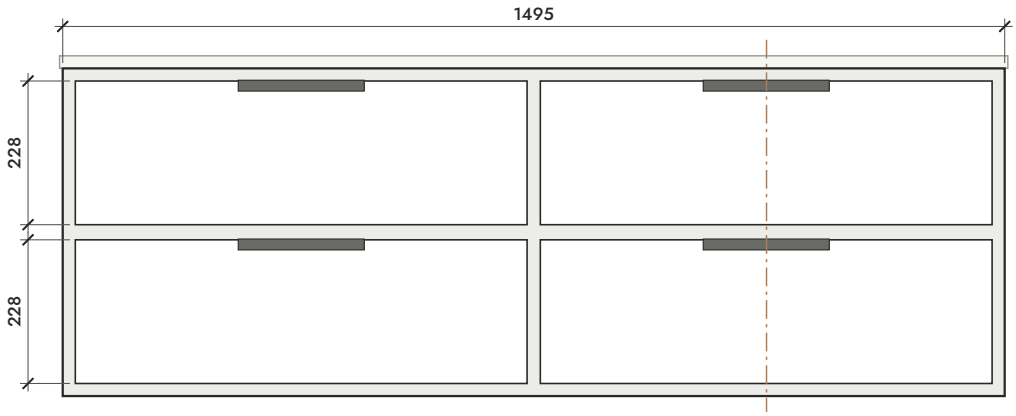

Side view

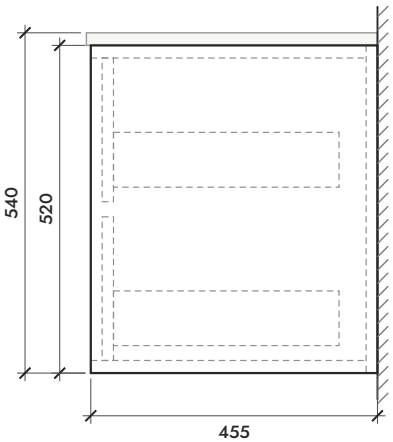

The drawer down view looks down on the top drawer with the benchtop removed. Only the top drawer has the plumbing cut-out. Each picture-framed front has a tab pull handle at its top centre.

Nominal width 1500mm. The Nuvolite benchtop overhangs the cabinet by 5mm each side and 7mm at the front.

Integrated power is fitted at the back of the bottom left drawer, at its left-hand end. A second outlet can be added at the right-hand end of the bottom right drawer.

Nara Nuvolite specifications. *All dimensions in millimetres. Our vanities are made to order, so please check site measurements before ordering.*